www.losyco.com

LOXrail® 25 fixed hard stop

Art. No. 484111 Drawing No. 17040-0280

LOXrail® 25 Festanschlag

- Hard stop to avoid that carriers leave the rails
- Rubber shock Absorber
- Could also be used as a support for positioning at the end of the track
- Mounted to the rail and additionally fixed in the floor with an anchor bolt (anchor bolt is not part of delivery)

- **Deadweight:** 2,912 kg

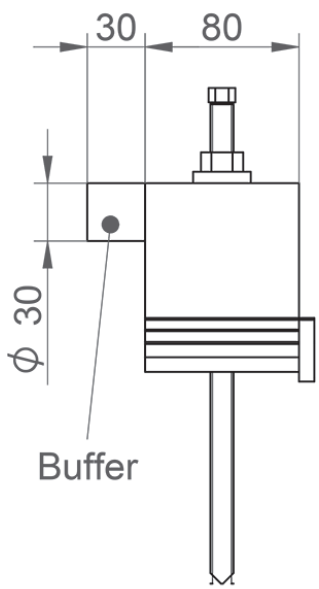

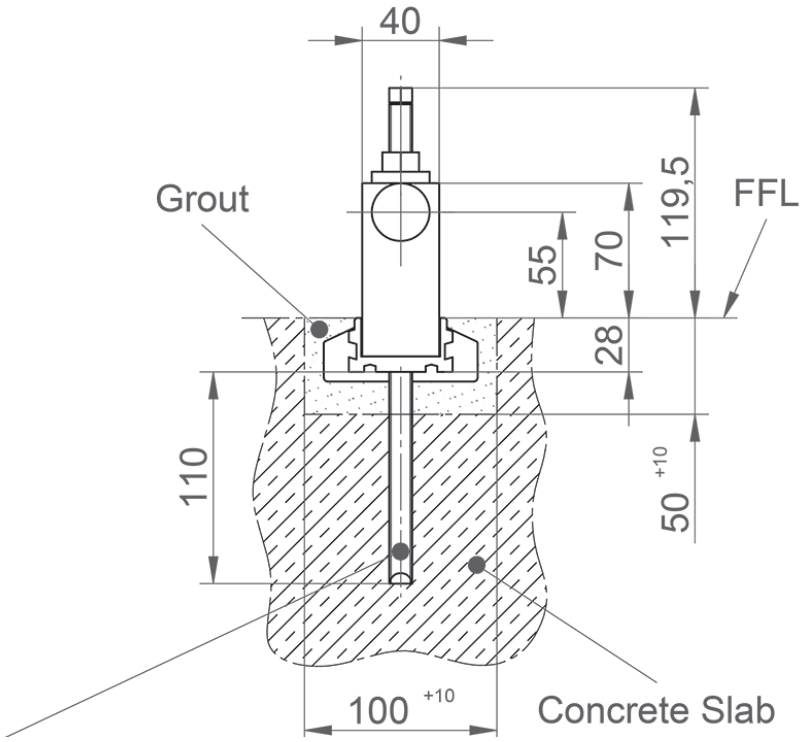

Technical data are subject to changes and errors. Only current article drawings are relevant.